Advanced Engineering Forum *Online: 2011-09-09*
ISSN: 2234-991X, Vol. 1, pp 3-8
doi:10.4028/www.scientific.net/AEF.1.3
© 2011 The Author(s). Published by Trans Tech Publications Ltd, Switzerland.

The reversing paging process of callee in heterogeneous networks

Cong ZHAO[a] , Wei GUO[b]

National Key Laboratory of Science and Technology on Communications, University of Electronic Science and Technology of China, Chengdu 611731, China
[a]Zhao-cong@163.com, [b]guowei@uestc.edu.cn

Key word: heterogeneous network; ubiquitous; mobility management; paging; handoff; reversing paging

Abstract. To achieve the goal that anybody could communicate with anyone at anytime in anyplace and in anyway, many technologies, such as GSM, CDMA, WCDMA, CDMA2000, TD-SCDMA, 802.11a/b/g and so on, come true in the past years. And now, many B3G or 4G technologies are being studied. It is well-known that the future network would be heterogeneous networks. It is studied in this paper the mobility management of wireless heterogeneous network and a reversing paging process of callee is proposed which integrates paging and handoff. In the process when the caller pages the callee choosing its best suited network on one end, the callee chooses its own best network to begin a reversing paging process to set up the communication. The simulation tells that the proposed process has better performances in the call delay, the call succeeding rate and the wireless signal cost than that of the existing process in which it sets up the call first and then does vertical handoff independently.

1. Introduction

The aim of mobile communication is to realize that anybody could communicate with anyone at anytime in anyplace and in anyway. To achieve this goal, in the past years, many technologies, such as GSM, CDMA, WCDMA, CDMA2000, TD-SCDMA, 802.11a/b/g and so on, come true. And now, many B3G or 4G technologies are being studied. It is well-known that the future network would be heterogeneous networks.

As one of the key technologies of wireless networks, the mobility management, which means the networks could provide continual communication when the mobile terminals move in the areas covered by the networks, consists of two process: location management and handoff management. Location management, consisting of updating and paging, realizes tracking, storing, searching and updating the location information of the terminals; while handoff management realizes the maintenance of the communication when the terminals move, making the session not interrupted and the data not lost. However, the existing mobility management technologies, almost aiming at a certain network, could not satisfy the need of heterogeneous networks so that we must study the mobility management in the heterogeneous ubiquitous networks. [1, 2]

Facing the challenge, many studies came out recently. Some scholars study the cases of two networks [3,4,5]; some scholars propose adding some gateways to transfer the protocols between each different networks [6,7]; some ones propose a unified location mobility (UMM) to manage the multiple protocols using a super HLR [8,9,10,11]; and many scholars study other corresponding vertical handoff problems between different networks such as system discovering [12,13], handoff

This article is an open access article under the terms and conditions of the Creative Commons Attribution (CC BY) license
(https://creativecommons.org/licenses/by/4.0)

decision [14,15,16,17], handoff enforcing [18,19,20,21]. However, all these studies consider the location management and the handoff management separately for they are independent when implement. In this paper, a reversing paging process of callee is proposed which takes paging in location management and handoff management into consider together.

This paper is organized as follows. Section 2 describes the heterogeneous framework and the existing paging and vertical handoff process. In section 3 the proposed reversing process of callee in heterogeneous is introduced. The experimental performance evaluations follow in section 4. The conclusions are given in section 5.

2. The heterogeneous framework and the existing paging and vertical handoff process

Future wireless networks will be ubiquitous and heterogeneous. The heterogeneous wireless networks will integrate different access networks, such as IEEE 802.15 WPAN, IEEE 802.11 WLAN, IEEE 802.16 WMAN, UMTS and Ad hoc network, etc. These Pico-, Micro- and Macro-cell networks often overlap coverage in the same wireless service areas. In addition, it is a trend that the terminal has multiple radio interfaces for different wireless networks. We call this type of terminal as multi-mode terminal. The user with multimode terminal should roam among heterogeneous wireless networks by seamless handoff. Therefore, how to select the most efficient and suitable access network for user to meet a certain given application's QoS requirement and share resources of various networks becomes a significant topic in recent years.

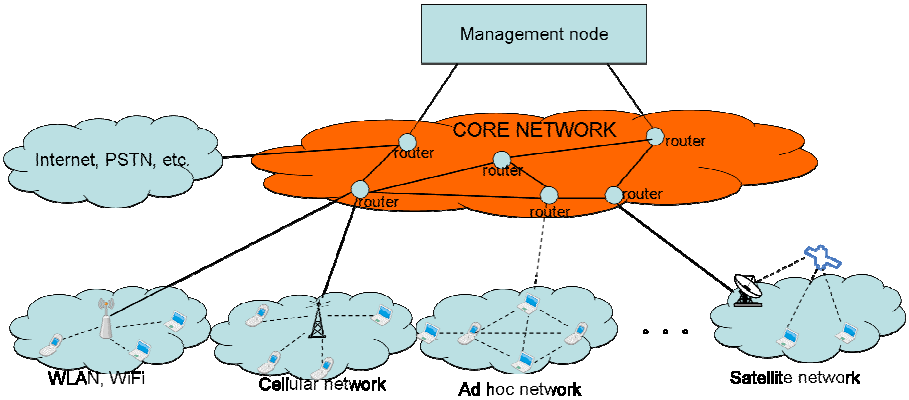

Fig.1 Architecture of heterogeneous networks

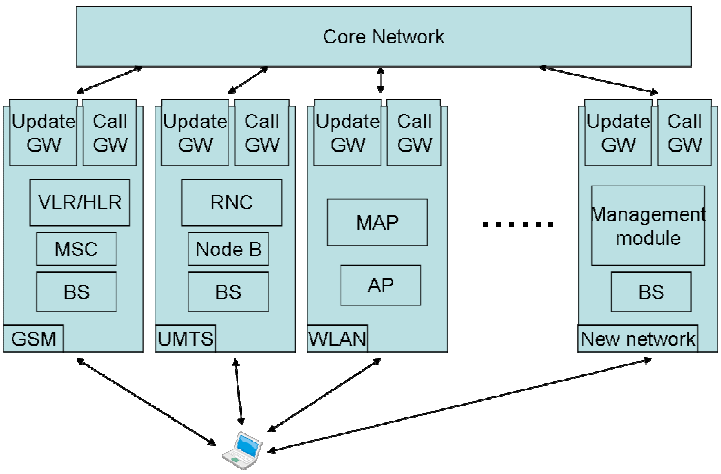

Fig.2 Simplified framework of heterogeneous networks

2.1. heterogeneous networks architecture

As shown as figure 1, the architecture of heterogeneous networks is composed of three main parts: core network and wireless access networks, each of which is presented in turn below.

1) core network:

The core network is the most important part of the heterogeneous because it will perform the control and management function. It will be all IP-based, distributed, and composed of routers and management nodes.

2) Wireless access networks:

Wireless access networks are composed of the wireless access nodes, such as the Node B of UMTS or AP of WLAN or other nodes which are reconfigurable and equipped with cognitive radio technology, and the gateway nodes.

The framework of heterogeneous networks can be predigested in figure 2.

2.2. the existing paging Procedures

Under the framework described, considering 2 subscriber, caller (u1) and callee (u2), the simplified procedures for paging is shown in figure 3 (A).

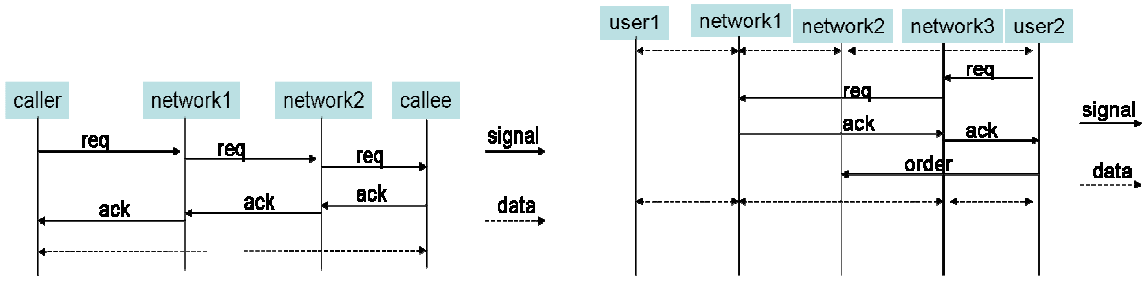

（A）paging （B）vertical handoff

Fig. 3 Simplified procedures for existing processes

When setting up a communication, the caller chooses the best network (network1) to send a request, the network1's GW chooses a suitable, maybe, network (network2) to touch callee according to the callee's location which is updated to the core network, then the callee sends back when received the request and the communication set up. The network1 can be the same as the network2 and they can also be different.

However, there is a problem: is the network2 the best to the callee? According to the location updating, the network1 may know which network could touch the callee, but not the network2's signal strength, bandwidth or even the callee's preference. So it needs a vertical handoff.

2.3. the existing vertical handoff Procedures

When vertical handoff, supposing user2 wants to change the link from network2 to network3, as shown in figure 3 (B), the user2 would send a request to network3 and the network3 would send the request to the network1 after received. Then it would received the ack from the network1 through the network3 and the new link sets up. After that it would order network2 to disconnect the old one.

3. The reversing paging process of callee in heterogeneous network

Frequently, the link through network2 is not the best link to user2 so that the vertical handoff happens as soon as the communication sets up.

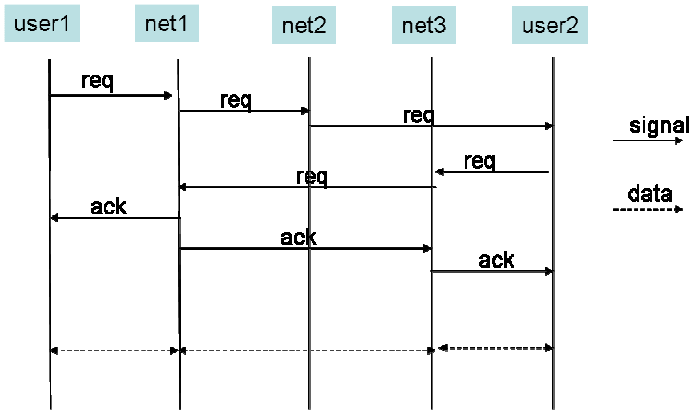

Fig. 4 Simplified procedure for reversing paging process

Considering the two procedures, we make them together to be one process. As shown in figure 4, the user1 (caller) sends the call request to its best suitable network1. Then the network1 send the request to user2 through a widely covered network2, such as cellular network or satellite network, because some network may have wider bandwidth but not cover every area, such as WLAN. After that, the user2 (callee) send a reversing request to the network1 through its best suitable network3. And then, the network1 send the acks to both user1 and user2 through their corresponding ones.

Apparently, the network2 may be the same as the network3. If so, the process shown in figure 4 would not be too much different from that in figure 3 (A).

4. The simulation and performance analysis

To evaluate the performance of the proposed process, we have estimated 3 important parameters: the total signaling costs, the call delay and the call success rate. Afterwards, we have compared these parameters obtained from the proposed procedure with those obtained from the existing paging and vertical handoff process.

We have set up a heterogeneous network consisting of LEO network, GSM network and WLAN network, in which the LEO network with wide bandwidth and high cost covers the whole earth, while the GSM with low cost and narrow bandwidth does not cover the ocean and the remote place, while the WLAN only has APs in cities but has largest bandwidth.

We have assumed 5 scenarios, each of which is presented in turn below.

1) The callers and the callees are able to link in the same network which is the best one for them.

2) The callers and the callees are able to link in the same network which is not the best for the callees.

3) The users communicate by video but some of them move passing some places that have no APs.

4) Some users are in the plane flying over the ocean.

5) There happens some disaster in the callees' place so that the equipments on the ground destroyed and the callers' network do not known the case.

The simulation results are shown in the figure 6 and figure 7.

Figure 6 (A) tells that the proposed reversing paging process would have more call delay than that of traditional method but the disparity is not very large. However, the proposed method needn't vertical handoff so that it has less call delay than that of the process traditional paging first and then vertical handoff. The scenario 1 is a very especial status which also needn't vertical handoff but it is not very often.

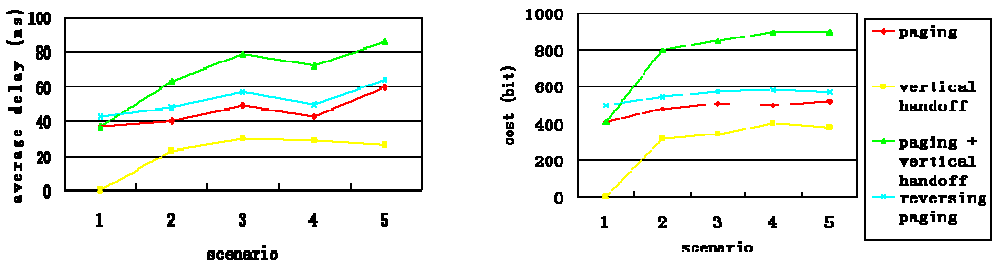

（A）Average delay （B）Cost in the wireless signals

Fig. 6 Performance the simulation

Figure 6 (B) shows the same trend as the figure 6 (A). The proposed method has lower cost than that of the tradition method in which it sets up the call first and then does vertical handoff independently except in scenario 1.

Figure 7 indicates that the reversing paging process has higher call success rate than the traditional paging method because the proposed one choose the network which has the best coverage area while the existing usually choose a common one and there are many cases would affect the call success rate such as the instance in scenario 5.

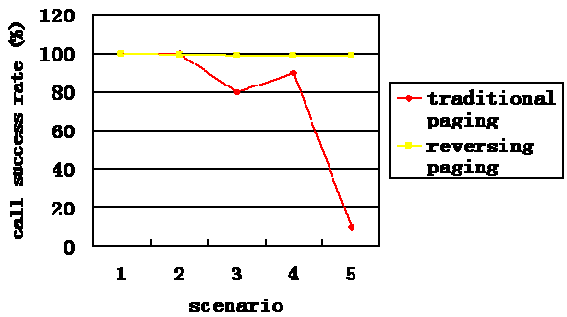

Fig. 7 Call success rate

5. Conclusion

As one of the key technologies of wireless network, mobility management is consisting of location management and handoff management. The existing studies do not consider them together usually for they are operating at independent time. A reversing paging process of callee is proposed in this paper which makes the paging procedure in location management and the handoff procedure together. The simulation results indicate that the proposed method has better performance in the call delay, the call succeeding rate and the wireless signal cost than that of the existing process in which it sets up the call first and then does vertical handoff independently.

Acknowledgement

This work is supported by the National Basic Research Program of China (973 Program)(2009CB320405) and the Major National Science & Technology Specific Program（2010ZX03005-002）

References

[1] I. F. Akyilaiz., J. McNair, J. S. Ho., Mobility management in next-generation wireless systems, Proceedings of the IEEE, 1999, 87 (8), pp. 1347-1384.

[2] IETF, Mobility Related Terminology, 2004, 6.

[3] M. Jaseemuddin, An architecture for integrating UMTS and 802.11 WLAN networks, Proceedings of IEEE Symposium on Computers and Communication 2003 (ISCC 2003), pp.716-723.

[4] Y. H. Huang, J. Y. Chen, W. S. Chen, C. Yang, H. T. Chu, A comparison between SIP and network layer mobility management protocols in IP-based wireless networks, Fifth IEE International Conference on 3G Mobile Communication Technologies 2004, pp. 317 – 321.
[5] Xiuhua Fu, Wenan Zhou, Junli Xu, Junde Song, Extended mobility management challenges over cellular networks combined with cognitive radio by using multi-hop network, SNPD 2007, pp. 683 – 688.
[6] A. D. Assouma, R. Beaubrun, S. Pierre, Mobility management in heterogeneous wireless networks, IEEE Journal on Selected Areas in Communications, 2006, 24(3), pp. 638 – 648.
[7] A.D. Assouma, R. Beaubrun, S. Pierre, A location management scheme for heterogeneous wireless networks, WiMob'2005, pp. Vol. 2, 51 – 56.
[8] A. M. Hadjiantonis, M. Charalambides, G. Pavlou, A policy-based approach for managing ubiquitous networks in urban spaces, ICC2007, pp. 2089 – 2096.
[9] O. Haase, K. Murakami, T. F. LaPorta, Unified mobility manager: enabling efficient SIP/UMTS mobile network control, IEEE Wireless Communications, 2003, 10(4), pp. 66-75.
[10] O. Haase, Ming Xiong, K. Murakami, Multi-protocol profiles to support user mobility across network technologies, Proceedings of the 2004 IEEE International Conference on Mobile Data Management, 2004, pp. 100-105.
[11] R. Ben, J. M. Bonnin, Mobility aware application manager for mobile networks, ITST2008, pp. 337 – 342.
[12] Mark Stemm, H. Randy, Katz, Vertical handoffs in wireless overlay networks, ACM Mobile Networking (MONET), special issue on mobile networking in the internet, 1998, (3), pp. 335-350.
[13] WenTsuen Chen, YenYuan Shu, Active Application Oriented Vertical Handoff in Next-Generation Wireless Networks, 2005 IEEE Wireless Communications and Networking Conference (WCNC2005), 2005, pp. 1383-1388.
[14] A. Hasswa, N. Nasser, H. Hossanein, Generic vertical handoff decision function for heterogeneous wireless, Second IFIP International Conference on Wireless and Optical Communications Networks(WOCN2005), 2005, pp. 239-243.
[15] Fang Zhu, J. McNair, Optimizations for vertical handoff decision algorithms, IEEE Wireless Communications and Networking Conference 2004 (WCNC2004), 2004, pp. 867-872.
[16] Qiang Guo, Jie Zhu, Xianghua Xu, An adaptive multi-criteria vertical handoff decision algorithm for radio heterogeneous network, IEEE International Conference on Communications 2005 (ICC2005), 2005, pp.2769-2773.
[17] S. Balasubramaniam, J. Indulska, Vertical handovers as adaptation methods in pervasive systems, the 11th IEEE International Conference on Networks 2003 (ICON2003), 2003, pp. 705-710.
[18] Hyun-Ho Chio, O. Song, Dong-Ho Cho, A seamless hand off scheme for UMTS-WLAN interworking, IEEE Global Telecommunications Conference 2004 (GLOBECOM `04), 2004, pp. 1559-1564.
[19] Cheng Wei Lee, Li Ming Chen, Meng Chang Chen, A Framework of Handoffs in Wireless Overlay Networks Based of Mobile IPv6, IEEE Journal of Selected Areas in Communications, 23(11), pp. 2118-2128.
[20] Li Ma, Fei Yu, Victor C. M. Leung, A new method to support UMTS/WLAN vertical handover using SCTP, IEEE Wireless Communications, August 2004, pp. 44-51.
[21] Wei Wu, N. Banerjee, K. Basu, SIP-based vertical handoff between WWANs and WKANs, IEEE Wireless Communications, June 2005, 12(3), pp. 66-72.