Defect and Diffusion Forum
ISSN: 1662-9507, Vol. 446, pp 57-62
doi:10.4028/p-44wCh6
© 2026 The Author(s). Published by Trans Tech Publications Ltd, Switzerland.
Submitted: 2025-07-23
Revised: 2025-08-20
Accepted: 2025-10-23
Online: 2026-01-13

Verification of a Novel Mathematical Model for Determination of the Biomass Specific Growth Rate in Bioprocesses Using Relative Change in Biomass Measurements

Mirjam Kraus[1,a*], Andrea Böhme[1,b] and Gianluca Verona Rinati[2,c]

[1]Technical University of Applied Sciences Wildau, 15745, Wildau, Germany

[2]University of Rome Tor Vergata, Department of Industrial Engineering, 00133, Rome, Italy

[a]info@mirjam-kraus.de, [b]andrea.boehme@th-wildau.de, [c]gianluca.verona.rinati@uniroma2.it

Keywords: biomass specific growth rate, real-time monitoring, sustainable bioprocesses, oxygen uptake rate, cultivation process, off gas

Abstract. This study presents a new mathematical model for determining the specific growth rate of biomass in biotechnological production processes, which aims to optimize the production of biotechnological products such as the advanced material polyhydroxyalkanoates. The specific growth rate is classified by the FDA as a critical process parameter that affects product quality and quantity, but is difficult for laboratory personnel to determine. Therefore, a simple and robust method for real-time monitoring and control is crucial. According to the current state of the art, the established Luedeking-Piret model for determining the specific growth rate requires the determination of the biomass as an absolute value to initialize the model and to determine two further model parameters. However, determining the biomass is time-consuming and error-prone. The new relative model replaces this value with the relative change in biomass, which can be easily recorded using standard laboratory methods such as optical density measurement. This eliminates the need for time-consuming and resource-intensive preliminary work. Despite this simplification, simulation tests have shown that the new model delivers identical results to the established model. It represents an independent, precise alternative and offers advantages in terms of handling. The results underline the model's potential to make bioprocesses more sustainable and efficient. Especially in research, material consumption, laboratory time and costs can be reduced compared to the established model. Future experiments will further investigate the performance of the new approach compared to the established model.

Introduction

The specific growth rate (further referred to as SGR or μ) is a key parameter in the cultivation of microorganisms in bioreactors. It describes the relative change in biomass per unit of time, normalized to the existing biomass. The SGR provides valuable information about the cellular state of the culture and is closely linked to the productivity of bioprocesses. [1,2]. Therefore, reliable monitoring of the SGR is essential for process control, regulation and optimization. In practice, however, determining the SGR is challenging. Common methods for direct measurement, such as dry weight determination of biomass, cell counting, optical density (OD600) or dielectric spectroscopy, are either invasive, delayed, time-consuming or prone to interferences. In addition, some techniques require complex calibrations that are highly dependent on the cell type and culture medium [3,4]. To overcome these limitations, model-based approaches are increasingly being used to indirectly estimate the SGR from online-accessible process variables. Both data-driven (e.g., artificial neural networks) and mechanistic models are employed in this context. While data-driven models can yield good results for specific processes, they typically require large training datasets and are generally not transferable to other systems [5,6]. Their use is therefore limited to well-known process conditions, which significantly restricts their applicability in dynamic process environments or in the development of new processes. In contrast, mechanistic models, such as the classical Luedeking-Piret model (LPM), are based on established process relationships involving online process variables like the oxygen uptake rate (OUR) and carbon dioxide evolution rate (CER), and offer greater

This article is an open access article under the terms and conditions of the Creative Commons Attribution (CC BY) license
(https://creativecommons.org/licenses/by/4.0)

transparency and robustness while maintaining good target variable prediction accuracy [7]. A major drawback, however, is that this model requires the absolute biomass as an input variable [8], a parameter that typically demands preliminary experiments to correlate it with a more easily measurable quantity, which is both time-consuming and error-prone [9,10].
The aim is the verification of a newly developed model for estimating the SGR that retains the advantages of the established LPM, but does not require the input of absolute biomass. Within the framework of a simulation-based batch cultivation of *Escherichia coli*, the study investigates whether the new model achieves the same result for the SGR as the LPE, while reducing measurement effort and offering greater practical applicability.

Material and Methods

Computer simulation. The model verification was carried out using a simulation with object pascal programming language within the RAD Studio integrated development environment. The simulation was performed with a fixed time interval of 10 seconds. It was designed to emulate a batch cultivation of *E. coli*, representing a complete bioprocess trajectory with realistic, yet varied phases [11]. A predefined, time-dependent SGR was applied, which is divided into the following phases as shown in Tab. 1:

Table 1. Definition of simulated SGR phases and time intervals.

Phase	Time interval [h]	μ_{Sim} [1/h]
lag	0:00 – 1:00	const. = 0.0
acceleration	1:00 – 1:45	linearly increasing from 0.0 to 0.6
log	1:45 – 6:00	const. = 0.6
deceleration	6:00 – 6:50	linearly decreasing from 0.6 to 0.1
	6:50 – 8:00	const. = 0.1
deceleration and death	8:00 – 8:30	linearly decreasing from 0.1 to -0.01

where μ_{Sim} [1/h] denotes the simulated SGR. Based on the simulated SGR, the temporal evolution of the absolute biomass was calculated using a population model Eq. 1:

$$X_{(t)} = X_0 \cdot e^{\mu_{(t)} \cdot \Delta t}. \tag{1}$$

The oxygen uptake rate was subsequently determined based on the Luedeking-Piret Eq. 2 [12]:

$$OUR_{(t)} = \mu_{(t)} \cdot X_{(t)} \cdot y + X_{(t)} \cdot m. \tag{2}$$

Here, X [g] represents the simulated absolute biomass, X_0 [g] is the initial biomass at the start of the simulation, and OUR [mol/h] is the simulated oxygen uptake rate. The parameter y [mol(O_2)/g(X)] denotes the specific yield coefficient of the cell culture and describes how much oxygen is required to produce a certain amount of biomass. The parameter m [mol(O_2)/g(X)/h] represents the specific oxygen demand for maintaining cellular activity independently of growth. Both parameters are assumed to be constant [13].

The model parameters used are listed in Tab. 2, where y and m were selected based on typical literature values for *E. coli* and were slightly adjusted to reduce numerical inaccuracies during the batch simulation.

Table 2. Model parameters used for SGR simulation with the Luedeking-Piret model.

Parameter	Value	Dimension
X_0	5	g
m	0.0036	g/mol/h
y	0.04	g/mol

Novel model. To verify the novel model, the ratio m/y [1/h] was used as the sole input parameter. Using this specific constant, the simulated OUR derived from the reference model according to Luedeking-Piret, was mathematically separated into growth-independent component $OURm$ [mol/h]

and a growth-associated component *OURy* [mol/h]. This separation was performed according to the concept illustrated in Fig. 1:

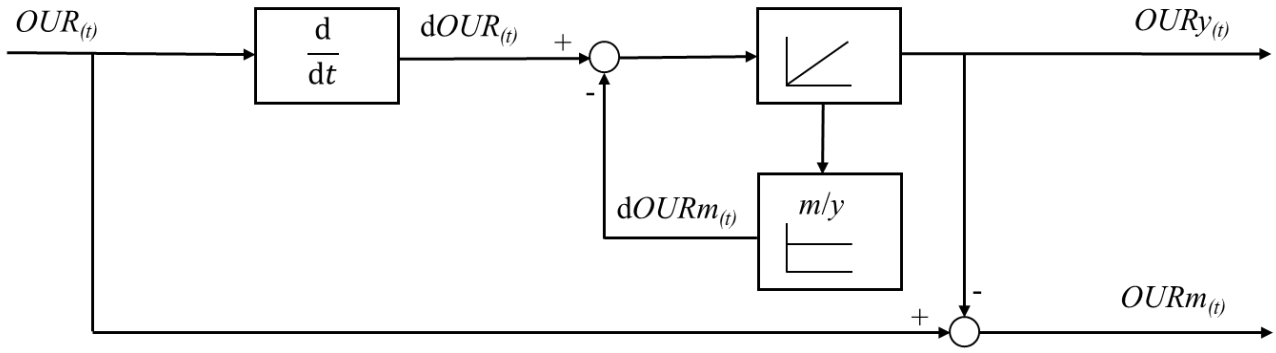

Fig 1. Signal flow diagram of the novel relative growth model with a differential, integral und proportional element to calculate the components of *OUR* without the need of *X* and with just one model parameter *m/y*.

The ratio *m/y* is 0.09 1/h, as derived from Tab. 1. Based on the signal flow diagram in Fig. 1, the SGR in the novel model μ_{Est} [1/h] can be derived from the proportional relationship between *OURm* and *X* according to Eq. 1 leading to Eq. 3:

$$\mu = \frac{\mathrm{d}OURm}{\mathrm{d}t} \cdot \frac{1}{OURm}. \tag{3}$$

Model errors and agreement. To evaluate the performance of the newly developed model, the estimated SGR values were compared to the simulated SGR values. For this purpose, for statistical methods were used. The mean absolute error (MAE) measures the average absolute difference between the estimated and simulated SGR values and is calculated as:

$$MAE = \frac{1}{n}\sum_{t=0}^{n}\left|\hat{y}_{(t)} - y_{(t)}\right|. \tag{4}$$

The root mean square Error (RMSE) represents the square of the residuals of the differences between the estimated and simulated SGR values. The RMSE formula is as follows:

$$RMSE = \sqrt{\frac{1}{n}\sum_{t=0}^{n}(\hat{y}_{(t)} - y_{(t)})^2}. \tag{5}$$

The coefficient of determination (R^2) of the linear regression was used to assess the goodness of fit between the estimated and simulated SGR values and was calculated as follows:

$$R^2 = \frac{\sum_{t=0}^{n}(\hat{y}_{(t)} - \bar{y})^2}{\sum_{t=0}^{n}(y_{(t)} - \bar{y})^2}, \tag{6}$$

where n is the number of data counts, $\hat{y}_{(t)}$ the values estimated by the novel model, $y_{(t)}$ the simulated reference values, and $\bar{y}_{(t)}$ the mean of the simulated values. Additionally, the slope a and the intercept b of the linear regression were determined to further assess the model`s accuracy:

$$\hat{y}_{(t)} = a \cdot y_{(t)} + b. \tag{7}$$

Results and Discussion

Evaluation of SGR estimation errors and model agreement. Tab. 3 summarizes the results of the batch simulation, comparing the simulated SGR values and the estimated SGR values obtained from the novel approach:

Table 3. Summary of estimation accuracy and model agreement between the novel SGR estimator and the simulated reference in the batch cultivation process.

MAE [1/h]	RMSE [1/h]	R^2	Intercept [1/h]	Slope
0.00071	0.00084	1.00	-0.292561E-3 ± 0.010168E-3	0.99887 ± 0.000024

The simulation results demonstrate excellent agreement between the novel model and the simulation. Both the MAE and the RMSE are in the range of 10^{-3} 1/h, which is significantly below the threshold of practical significance. These minor deviations are likely due to numerical rounding errors inherent in the differential equations applied, further emphasizing the numerical stability and robustness of the novel approach.

The coefficient of determination (R^2) is 1.00, indicating a perfect correlation between the estimated and the simulated SGR values. Linear regression analysis yields a slope of 0.99887 ± 0.000024 and an intercept of -0.000293 ± 0.000010 1/h, corresponding to an ideal relationship of $\hat{y}_{(t)} \approx y_{(t)}$. These results suggest that the model exhibits no systematic bias throughout the entire course of the simulated batch process. The graphical representation of the simulated batch process and the identity line in Fig. 2 visually confirms this finding.

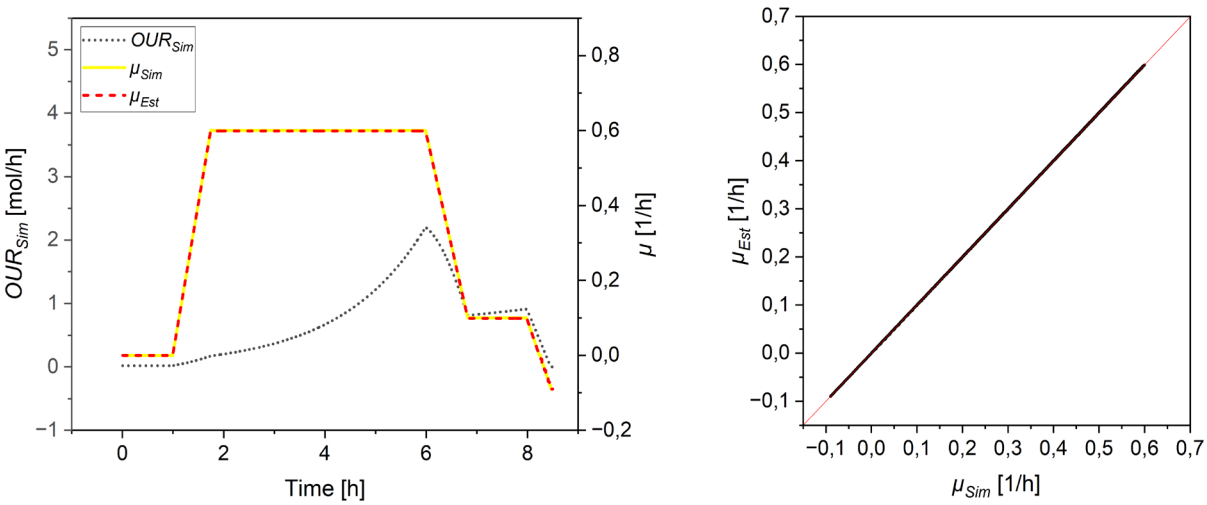

Fig 2. *E. coli* batch simulation showing the *OUR* (dotted line), estimated SGR (dashed line) and simulated SGR (solid line) over time (left) and the identity line of estimated SGR and simulated SGR (right). *OUR* was computed from the simulated SGR using LPM and served as the input signal for estimating the SGR in the novel model.

Throughout the entire batch process, the estimated SGR values follow the simulated SGR values. In all phases, from the lag phase to the death phase, the novel model remains stable and delivers accurate predictions of the SGR. Notably, the model accurately captures abrupt changes in SGR without any time delay. Furthermore, no discontinuities or singularities such as division by zero were observed that would require special treatment.

Summary

This study presented a novel model for estimating the SGR in bioprocesses that shows excellent agreement with the established Luedeking-Piret reference model, while eliminating the need for direct biomass measurement. The model achieved a MAE of 0.00071 1/h, a RMSE of 0.00084 1/h, and a R^2 of 1.00, with a relationship of $\hat{y}_{(t)} \approx y_{(t)}$. Unlike traditional approaches, the novel model relies solely on online-accessible process variables of bioprocesses, such as OUR or CER. They can be determined non-invasively via off-gas analysis, using measurements of the gas flow rate and the respective gas

concentration in the inlet and outlet gas streams. Due to its structural simplicity, the model requires only a single input parameter, the ratio m/y, which can be calibrated during the bioprocess based on known SGR values.

Overall, the proposed model offers a precise, robust, ready to use and resource-efficient alternative for online SGR estimation. Its flexible design makes it broadly applicable under aerobic conditions, for both prokaryotic and eukaryotic cells and supports different cultivation modes.

Outlook

Further investigations are necessary to evaluate the performance of the novel model under real-world conditions. This includes assessing its robustness and accuracy in the presence of signal noise, incorrect parameter inputs and non-zero initial SGR ($\mu > 0$). Moreover, experimental validation using real process data is essential to confirm the model's practical applicability.

References

[1] I. Rocha, A. Veloso, S. Carneiro et al., "IMPLEMENTATION OF A SPECIFIC RATE CONTROLLER IN A FED-BATCH E. COLI FERMENTATION," *IFAC Proceedings Volumes*, vol. 41, no. 2, pp. 15565–15570, 2008.

[2] O. Paredes-López, E. Camargo-Rubio, and A. Ornelas-Vale, "Influence of specific growth rate on biomass yield, productivity, and compostion of Candida utilis in batch and continuous culture," *Applied and environmental microbiology*, vol. 31, no. 4, pp. 487–491, 1976.

[3] Y. Brignoli, B. Freeland, D. Cunningham et al., "Control of Specific Growth Rate in Fed-Batch Bioprocesses: Novel Controller Design for Improved Noise Management," *Processes*, vol. 8, no. 6, p. 679, 2020.

[4] M. M. Schuler and I. W. Marison, "Real-time monitoring and control of microbial bioprocesses with focus on the specific growth rate: current state and perspectives," *Applied Microbiology and Biotechnology*, vol. 94, no. 6, pp. 1469–1482, 2012.

[5] V. Galvanauskas, R. Simutis, and V. Vaitkus, "Adaptive Control of Biomass Specific Growth Rate in Fed-Batch Biotechnological Processes. A Comparative Study," *Processes*, vol. 7, no. 11, p. 810, 2019.

[6] K. M. Desai, B. K. Vaidya, R. S. Singhal et al., "Use of an artificial neural network in modeling yeast biomass and yield of β-glucan," *Process Biochemistry*, vol. 40, no. 5, pp. 1617–1626, 2005.

[7] S. Gnoth, M. Jenzsch, R. Simutis et al., "Control of cultivation processes for recombinant protein production: a review," *Bioprocess and Biosystems Engineering*, vol. 31, no. 1, pp. 21–39, 2008.

[8] M. Matukaitis, D. Masaitis, R. Urniežius et al., "Non-Invasive Estimation of Acetates Using Off-Gas Information for Fed-Batch E. coli Bioprocess," in *The 1st International Electronic Conference on Processes: Processes System Innovation*, p. 5, MDPI, Basel Switzerland, 2022.

[9] J. Beal, N. G. Farny, T. Haddock-Angelli et al., "Robust estimation of bacterial cell count from optical density," *Communications biology*, vol. 3, no. 1, p. 512, 2020.

[10] W. T. Godbey, "Cell growth," in *Biotechnology and its Applications*, pp. 117–150, Elsevier, 2022.

[11] H. Chmiel, R. Takors, and D. Weuster-Botz, *Bioprozesstechnik*, Springer Berlin Heidelberg, Berlin, Heidelberg, 2018.

[12] R. Luedeking and E. L. Piret, "A kinetic study of the lactic acid fermentation. Batch process at controlled pH," *Journal of Biochemical and Microbiological Technology and Engineering*, vol. 1, no. 4, pp. 393–412, 1959.

[13] M. M. Silveira and M. A. B. Molina, "Indirect estimation of Bacillus thuringiensis var. israelensis biomass concentration using oxygen balance data," *Brazilian Journal of Chemical Engineering*, vol. 22, no. 4, pp. 495–500, 2005.

The publication of this article was funded by the Technische Hochschule Wildau